epd square .

Environmental Product Declaration

Specific EPD

In accordance with ISO 14025:2006 and EN 15804:2012+A2:2019/AC:2021

Walkway Mat

ECO Cover ApS



Programme
EPD Square | www.epdsquare.com

Programme operator
EPD Square, s.r.o.

EPD Registration number
SQ 00-001

Publication date
05.06.2024

Revision date
23.09.2026

Valid until
04.06.2029

epd square .

ECOCOVER
WE COVER YOUR PROJECT

General information

Product
Walkway Mat

Program operator
EPD Square, s.r.o.
Lermontovova 3, 811 05,
Bratislava, Slovak Republic
Email: info@epdsquare.com

Registration number
SQ 00-001

Publication date
05.06.2024

Revision date
23.09.2026

Valid until date
04.06.2029

Owner of the declaration
ECO Cover ApS
Contact person: Morten Skorstengaard
Email: ms@ecocover.nu

Manufacturer
Pulcarpet
Ankara
Turkey

Place of production
Ankara, Turkey

Product Category Rules (PCR)
EPD Square PCR v1.0.1, 2025

Declared unit
1 m^2

Mass per DU
3 kg

UN CPC code
36910

Geographical scope
Europe

Year of study
2023

Comparability
EPDs of construction products may not be comparable if they do not comply with EN 15804 and if they are not compared in the context of the building.

EPD author
Sarah Curpen, Silvia Vilčeková, EPD Clarity s.r.o.

Verification type
Independent verification of the declaration and data, according to ISO14025:2006
Internal: ☐
External: ☑

Verified by
Eng. Shai Ben Aharon, KVS

Shai

The owner of the declaration shall be liable for the underlying information and evidence.
EPD Square shall not be liable with respect to manufacturer, life cycle assessment data and evidence.

System boundaries

The EPD covers Cradle-to-gate with options, modules C1-C4, module D and additional modules (A4, A5).

Modules declared and geographical scope

	Product stage			Construction process stage		Use stage							End of life stage				Resource recovery stage
	Raw material supply	Transport	Manufacturing	Transport	Construction installation	Use	Maintenance	Repair	Replacement	Refurbishment	Operational energy use	Operational water use	De-construction demolition	Transport	Waste processing	Disposal	Reuse-Recovery-Recycling-potential
Module	A1	A2	A3	A4	A5	B1	B2	B3	B4	B5	B6	B7	C1	C2	C3	C4	D
Modules declared	✓	✓	✓	✓	✓	MND	MND	MND	MND	MND	MND	MND	✓	✓	✓	✓	✓
Geographic scope	TR	TR	TR	TR/ DK	DK	MND	MND	MND	MND	MND	MND	MND	DK	DK	DK	DK	DK

Modules not declared = MND

Description of organization

ECO Cover ApS is a retailer of products for covering and protecting surfaces. They have a very wide range of solutions for everything from concrete stairs/floors to worktops, doors and windows to lifts, wooden floors, fixtures and other finished surfaces They have a primary goal of helping to ensure that all Scandinavian construction projects and renovations can be delivered with an even higher quality than what has been done in the past. ECO Cover ApS has a strong focus on offering our customers a cover that is specific to the cover they need to make, so that it can be done as efficiently and easily as possible. They also make a big effort to think sustainability into as many products as possible.

Product information

Product name

Walkway Mat

Product description

Walkway Mat is a non-slip, non-flammable and easy-to-clean type of mat made of polyvinylchloride (PVC). It comes in 12 different colours. It is a flexible, durable, reliable and low maintenance solution. It lays down flexibly and clearly marks where the walkway is, even if the light has disappeared. It is designed to withstand foot traffic, loads and extreme weather conditions.
Physical Properties: 14 mm thickness, weight 3,0 kg/m^2. Non-slip, anti-bacterial, high visibility, easy to clean and protection from dirt.
Standards: ISO11925, EN1176-1, EN1177 :2011-01

Product application

Walkway Mat is a multipurpose product. It is primarily a solution for construction site access and access roads.

Geographical scope

Europe

Product contents information

Product components	Weight, kg	Post-consumer material, weight-%	Renewable material, weight-%
PVC	3,0	0	0
TOTAL	3,0	0	0
Packaging materials	**Weight, kg**	**Weight-% (versus the product)**	
Paper	0,02	0,67	
Wood Pallet	0,165	5,5	
TOTAL	0,185	6,17	

Manufacturing process

The sole material involved in production is vinyl. The vinyl is 100% sourced from primary materials and does not contain post-consumer or renewable sources. The vinyl is brought from various locations within Turkey to the city of Ankara where the manufacturing plant is located. The supply of vinyl does not originate from regular suppliers over time. Therefore, considering manufacturer's records from previous years, an average distance of 1000 km is considered. The method of transportation is truck with 16-32 metric ton payload capacity. The raw material, vinyl, is mixed and placed into the feeding line. The feeding part moves the raw material into the extruder and then the vinyl is moulded. The moulded semi-finished product is then dried and packaged as a finished product.

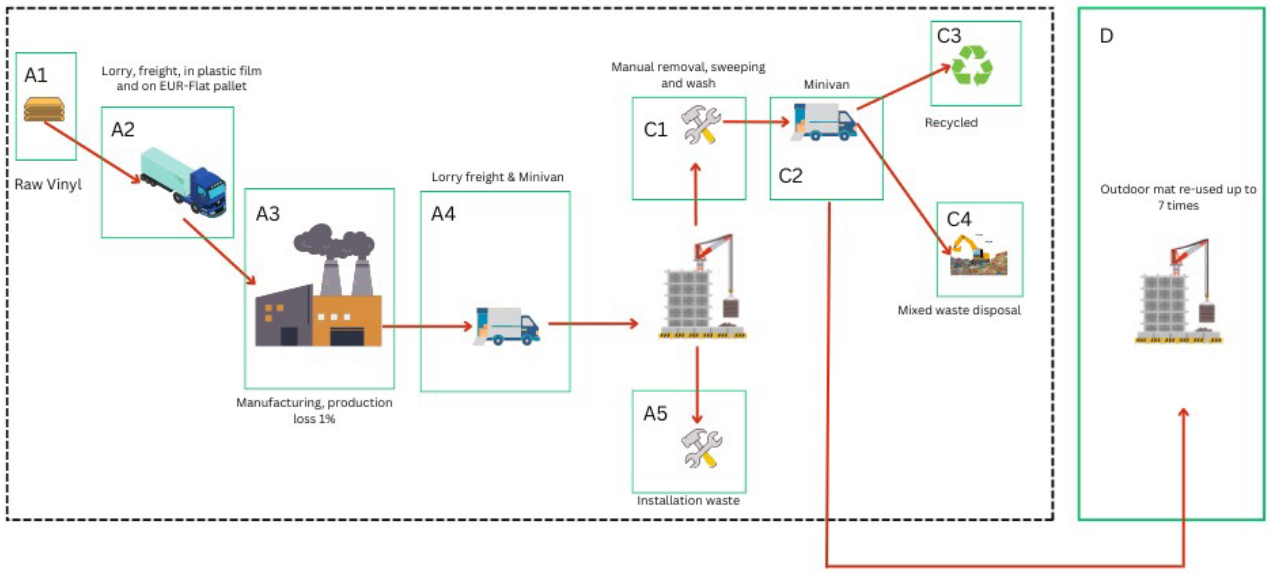

Life cycle assessment

Cut-off criteria

The study does not exclude any modules or processes which are stated mandatory in the EN 15804:2012+A2:2019 and the applied PCR. The study does not exclude any hazardous materials or substances. The study includes all major raw material and energy consumption. All inputs and outputs of the unit processes, for which data is available for, are included in the calculation. There is no neglected unit process more than 1% of total mass or energy flows. The module specific total neglected input and output flows also do not exceed 5% of energy usage or mass. Additives are not included in this study as their mass is less than 5% of total inputs. The production of capital equipment, construction activities, and infrastructure, maintenance and operation of capital equipment, personnel-related activities, energy and water use related to company management and sales activities are excluded.

In accordance with EN 15804+A2 cut-off criteria, colour pigments used in the manufacturing process, which account for 1% of the total mass input, have been excluded from the Life Cycle Assessment (LCA). The justification for this exclusion is as follows:

Mass contribution: The total mass of additives is below the 5% threshold defined in EN 15804+A2, which allows for the omission of inputs that contribute less than 5% to the total mass of the system.

Environmental relevance: The environmental impact of these additives is expected to be negligible compared to the primary raw materials and energy consumption. Their exclusion is unlikely to significantly influence
the overall LCA results or conclusions.

Data availability and effort justification: Given their minor contribution, the effort required to collect detailed data on the production and environmental impact of these additives would be disproportionate to their expected effect on the results.

Compliance with EN 15804+A2: The exclusion follows the cut-off rules of EN 15804+A2, which state that omitted inputs must not exceed 5% of energy use, mass, or environmental impact and should not alter the overall conclusions of the LCA.

Allocation, estimations, and assumptions

Allocation is based on annual production rate and made with high accuracy and precision. The values for 1 m^2 of the products which are used within this study are calculated by considering the total product weight per annual production. In the production plant, several kinds of products are produced; since the production processes of these products are similar, the annual production percentages are taken into consideration for allocation. According to the ratio of the annual production of the declared product to the total annual production at the factory, the annual total energy consumption, packaging materials and the generated waste per the declared product are allocated. Subsequently, the produced products output fixed to 1 m^2 and the corresponding amount of product is used in the calculations.

Database(s) and LCA software

This EPD has been created using One Click LCA Pre-Verified EPD Generator. Ecoinvent v3.11 and One Click LCA databases were used as sources of environmental data.

LCA scenarios and additional technical information

Module A1

This module includes the extraction and processing of all raw materials and packaging which occur upstream to the manufacturing site.

Module A2

The considered transportation impacts include exhaust emissions resulting from transportation of all raw materials from suppliers to production plant as well as the environmental impacts of production of the used fuel.

Module A3

The environmental impacts considered for the production stage cover the manufacturing of the production materials and fuels used by machines. The study considers the losses of main raw materials occurring during the manufacturing process. A mass-based allocation is applied to split the environmental burdens of the site among the finished products. The waste materials are recycled into the next production batch.

Manufacturing energy scenario (A3)

Electricity data source and quality	Electricity, high voltage, production mix	Ecoinvent 3.11
Electricity CO_2 eq. / kWh	0,56	
Energy data source and quality - Heating	Heat production, natural gas, at industrial furnace >100kW	Ecoinvent 3.11
Heating CO_2 eq. / MJ	0,0754	
Energy data source and quality - Cooling	Cooling energy, from natural gas, at cogen unit with absorption chiller 100kW	Ecoinvent 3.11
Cooling CO_2 eq. / MJ	0,0681	

Module A4

Transportation impacts that occurred from final product delivery to the construction site (A4) cover fuel direct exhaust emissions, environmental impacts of fuel production, as well as related infrastructure emissions. Transport of finished product is done in two legs:

I) In the first leg, the product is moved from the manufacturing location in Turkey to Denmark by truck.

II) Based on the manufacturer's record for product dispatch from his warehouse to various locations within Denmark, a weighted average distance of 215 km is considered. The product is dispatched by truck.

The material is packed in rolled bundles so that there is no loss during transportation.

Transportation scenario (A4)

Vehicle type used for transport	Lorry 16-32 ton, EURO 6
Distance to the construction site	Leg 1: 3354 km Leg2: 215 km
Capacity utilization	1

Module A5

The assembly of the products does not require any mechanical machine and can be installed by workers. The rolls are unpacked as laid on the construction site by workers manually. Therefore, the energy involved in assembling the product is zero. Packaging waste is considered in A5.

Module C1

Walkway Mat can be re-used. It is collected manually and brought back to the warehouse before being dispatched to the next construction site. The efficiency of collection was estimated as 95% by the EPD owner who performs collection and distribution of the product.

Module C2

Transportation distance to the closest disposal area is estimated as 50 km and the transportation method is assumed as lorry (Transport freight lorry >32 metric tonne) which is the most common. 95% of the Walkway Mat product is brought back to the warehouse, 558 km from the construction site. 3% are moved to recycling facility, 50 km away and 2% is transported as municipal waste 50 km to treatment facility.

Module C3

95% of the Walkway Mat is considered to be reused and 3% is taken to treatment facility where it is incinerated.

Module C4

2% of the Walkway Mat on construction site is assumed to be entangled with other materials such as concrete. Therefore, it is transported as mixed waste to the municipal treatment facility.

End of life (C1, C3, C4)

	Value	Unit
Collected separately	2,85	kg
Collected as mixed construction waste	0,15	kg
Reuse	2,85	kg
Recycling	0,09	kg
Energy recovery	0,00	kg
To landfill	0,06	kg

Module D

The loads and benefits of recycling and energy recovery are considered.

Data quality

The data quality information has been provided according to the requirements of EN 15941. The data assessment was done using the Product Environmental Footprint Category Rules. The data has been collected internally, considering the latest available average production amounts and measurements during the time period of 2024. The quality level in this study is qualified as Good. Data quality rating procedure has been performed using a rating system where “1” means Very good quality, and “5” means Very poor quality. No fair, poor or very poor data was found during the assessment of relevant data.

Geographical rating	Technology rating	Time-related rating	Average rating
1,4	1,0	1,0	1,1

LCA results

Results are presented per 1 m^2 (Declared Unit) of the product. Estimated impact results are only relative statements which do not indicate the end points of the impact categories, exceeding threshold values, safety margins or risks.

Core environmental impact indicators – EN 15804+A2

Indicator	Unit	A1-A3	A4	A5	C1	C2	C3	C4	D
GWP-total	kg CO_2 eq.	8,71E+00	2,15E+00	2,20E-01	0,00E+00	1,15E-01	4,72E-01	5,53E-03	-4,90E+00
GWP-fossil	kg CO_2 eq.	8,89E+00	2,14E+00	2,45E-02	0,00E+00	1,15E-01	4,72E-01	5,53E-03	-4,90E+00
GWP-biogenic	kg CO_2 eq.	-1,95E-01	5,42E-20	1,95E-01	0,00E+00	0,00E+00	0,00E+00	0,00E+00	-7,30E-04
GWP-LULUC	kg CO_2 eq.	1,02E-02	7,70E-04	1,23E-06	0,00E+00	3,89E-05	2,85E-04	4,03E-07	-2,84E-03
ODP	kg CFC-11 eq.	2,49E-06	4,27E-08	1,19E-11	0,00E+00	2,52E-09	1,09E-09	1,65E-11	-2,31E-06
AP	mol H^+ eq.	3,38E-02	4,46E-03	7,25E-06	0,00E+00	2,48E-04	9,61E-04	4,76E-06	-1,54E-02
EP-freshwater	kg P eq.	2,68E-03	1,44E-04	2,61E-07	0,00E+00	8,01E-06	5,83E-05	6,94E-08	-1,58E-03
EP-marine	kg N eq.	6,85E-03	1,07E-03	5,59E-06	0,00E+00	5,97E-05	6,56E-04	1,23E-04	-2,92E-03
EP-terrestrial	mol N eq.	6,94E-02	1,16E-02	3,07E-05	0,00E+00	6,45E-04	3,32E-03	1,94E-05	-2,78E-02
POCP	kg NMVOC eq.	3,28E-02	7,43E-03	8,99E-06	0,00E+00	3,93E-04	1,02E-03	7,99E-06	-2,10E-02
ADP-M&M	kg Sb eq.	9,81E-05	7,14E-06	6,25E-09	0,00E+00	4,05E-07	1,71E-06	1,25E-09	-9,77E-05
ADP-fossil	MJ	1,70E+02	3,02E+01	1,16E-02	0,00E+00	1,64E+00	1,46E+00	1,46E-02	-1,37E+02
WDP	m^3	4,30E+00	1,50E-01	8,27E-04	0,00E+00	8,71E-03	6,38E-02	6,42E-04	-1,50E+00

***GWP-total**: Global Warming Potential; **GWP-fossil**: Global Warming Potential fossil fuels; **GWP-biogenic**: Global Warming Potential biogenic; **GWP-LULUC**: Global Warming Potential land use and land use change; **ODP**: Depletion potential of the stratospheric ozone layer; **AP**: Acidification potential, Accumulated Exceedance; **EP-freshwater**: Eutrophication potential, fraction of nutrients reaching freshwater end compartment; See "additional requirements" for indicator given as PO4 eq. **EP-marine**: Eutrophication potential, fraction of nutrients reaching freshwater end compartment; **EP-terrestrial**: Eutrophication potential, Accumulated Exceedance; **POCP**: Formation potential of tropospheric ozone; **ADP-M&M**: Abiotic depletion potential for non-fossil resources (minerals and metals); **ADP-fossil**: Abiotic depletion potential for fossil resources; **WDP**: Water deprivation potential, deprivation weighted water consumption*

Additional (optional) environmental impact indicators – EN 15804+A2

Indicator	Unit	A1-A3	A4	A5	C1	C2	C3	C4	D
PM	Disease incidence	3,55E-07	1,58E-07	3,23E-10	0,00E+00	8,66E-09	9,72E-08	1,06E-10	-2,81E-08
IRP	kBq U235 eq.	4,09E-01	3,89E-02	2,84E-05	0,00E+00	1,98E-03	6,04E-03	1,24E-05	-7,57E-01
ETP-fw	CTUe	2,95E+02	4,01E+00	1,42E-01	0,00E+00	1,39E+00	4,55E+01	2,36E-01	-2,87E+01
HTP-c	CTUh	1,17E-08	3,60E-10	2,81E-12	0,00E+00	1,94E-11	7,36E-10	3,70E-13	-9,80E-09
HTP-nc	CTUh	8,41E-08	1,91E-08	5,73E-11	0,00E+00	1,03E-09	6,29E-09	6,43E-11	-5,83E-08
SQP	Dimensionless	4,99E+01	1,82E+01	1,51E-02	0,00E+00	9,87E-01	2,77E+00	3,46E-02	-1,57E+01

***PM**: Particulate matter emissions; **IRP**: Ionising radiation, human health; **ETP-fw**: Ecotoxicity (freshwater); **ETP-c**: Human toxicity, cancer effects; **HTP-nc**: Human toxicity, non-cancer effects; **SQP**: Land use related impacts / soil quality*

Use of natural resources

Parameter	Unit	A1-A3	A4	A5	C1	C2	C3	C4	D
RPEE	MJ	9,87E+00	5,28E-01	-8,17E-02	0,00E+00	2,70E-02	1,62E-01	2,02E-04	-7,03E+00
RPEM	MJ	1,75E+00	0,00E+00	-1,75E+00	0,00E+00	0,00E+00	0,00E+00	0,00E+00	7,20E-03
TPE	MJ	1,16E+01	5,28E-01	-1,83E+00	0,00E+00	2,70E-02	1,62E-01	2,02E-04	-7,02E+00
NRPE	MJ	1,03E+02	3,02E+01	-7,98E-01	0,00E+00	1,64E+00	-1,23E+02	-2,17E+00	-1,97E+02
NRPM	MJ	6,55E+01	0,00E+00	-9,65E-01	0,00E+00	0,00E+00	-6,32E+01	-1,29E+00	6,14E+01
TRPE	MJ	1,69E+02	3,02E+01	-1,76E+00	0,00E+00	1,64E+00	-1,86E+02	-3,46E+00	-1,35E+02
SM	kg	4,58E-02	1,40E-02	3,12E-05	0,00E+00	7,43E-04	8,92E-03	5,02E-06	3,00E+00
RSF	MJ	4,70E-02	1,77E-04	2,66E-07	0,00E+00	9,76E-06	7,62E-05	1,01E-07	-2,77E-04
NRSF	MJ	0,00E+00	0,00E+00	0,00E+00	0,00E+00	0,00E+00	0,00E+00	0,00E+00	0,00E+00
W	m^3	1,46E-01	4,11E-03	-1,73E-05	0,00E+00	2,01E-04	1,11E-03	-2,22E-04	-4,02E-02

***RPEE**: Renewable primary energy resources used as energy carrier; **RPEM**: Renewable primary energy resources used as raw materials; **TPE**: Total use of renewable primary energy resources; **NRPE**: Non-renewable primary energy resources used as energy carrier; **NRPM**: Non-renewable primary energy resources used as materials; **TRPE**: Total use of non-renewable primary energy resources; **SM**: Use of secondary materials; **RSF**: Use of renewable secondary fuels; **NRSF**: Use of non-renewable secondary fuels; **W**: Use of net fresh water*

End of life – Waste

Parameter	Unit	A1-A3	A4	A5	C1	C2	C3	C4	D
HW	kg	6,44E-01	4,39E-02	2,84E-04	0,00E+00	2,38E-03	3,00E-02	2,44E-05	-2,55E-01
NHW	kg	2,17E+01	9,26E-01	2,93E-02	0,00E+00	5,11E-02	7,38E-01	1,59E-01	-1,91E+02
RW	kg	1,03E-04	9,67E-06	7,10E-09	0,00E+00	4,88E-07	1,51E-06	3,03E-09	-1,98E-04

***HW**: Hazardous waste disposed; **NHW**: Non-hazardous waste disposed; **RW**: Radioactive waste disposed*

End of life – Output flows

Parameter	Unit	A1-A3	A4	A5	C1	C2	C3	C4	D
CR	kg	0,00E+00	0,00E+00	0,00E+00	0,00E+00	0,00E+00	0,00E+00	0,00E+00	0,00E+00
MR	kg	3,00E-02	0,00E+00	9,80E-03	0,00E+00	0,00E+00	2,85E+00	0,00E+00	0,00E+00
MER	kg	0,00E+00	0,00E+00	0,00E+00	0,00E+00	0,00E+00	9,00E-02	0,00E+00	0,00E+00
EEE	MJ	0,00E+00	0,00E+00	0,74E-01	0,00E+00	0,00E+00	0,00E+00	0,00E+00	0,00E+00
ETE	MJ	0,00E+00	0,00E+00	0,54E-01	0,00E+00	0,00E+00	0,00E+00	0,00E+00	0,00E+00

***CR**: Components for reuse; **MR**: Materials for recycling; **MER**: Materials for energy recovery; **EEE**: Exported electric energy; **ETE**: Exported thermal energy*

Information describing biogenic carbon content at factory gate

Biogenic carbon content	Value	Unit
Biogenic carbon content in product	0,000	kg C
Biogenic carbon content in the accompanying packaging	0,074	kg C

Specific data (GWP-GHG) and data variation for A1-A3

Specific data and data variation	Value-%
Specific data	50,2
Variation - product	-
Variation - site	-

Hazardous substances

The product does not contain any REACH SVHC substances in amounts greater than 0,1 %.

Contact information

Programme operator
EPD Square, s.r.o.
Lermontovova 3, 811 05
Bratislava, Slovak Republic
Email: info@epdsquare.com

EPD owner
ECO Cover ApS
Contact person: Morten Skorstengaard
Email: ms@ecocover.nu

Author of Life Cycle Assessment (LCA)
Sarah Curpen, Silvia Vilčeková, EPD Clarity s.r.o.
Email curpen@epdclarity.com, vilcekova@epdclarity.com

EPD verifier
Eng. Shai Ben Aharon, KVS
Email: shai@kvs.co.il

Bibliography

ISO 14020:2000
Environmental labels and declarations – General principles

ISO 14025:2006
Environmental labels and declarations - Type III environmental declarations - Principles and procedures

ISO 14040:2006
Environmental management - Life cycle assessment - Principles and framework

ISO 14044:2006
Environmental management - Life cycle assessment - Requirements and guidelines

EN 15804:2012+A2:2019/AC:2021
Sustainability of construction works - Environmental product declaration - Core rules for the product category of construction products

EN 15941:2024
Sustainability of construction works - Data quality for environmental assessment of products and construction work - Selection and use of data

EPD Square PCR v.1.0.1, 2025

EPD Square, General Programme Instructions v.1, 2024

Ecoinvent database v3.11 (2024) and One Click LCA database

Fråne, Anna & Miliute-Plepiene, Jurate & Almasi, Alexandra & Westöö, Anna-Karin. (2019). PVC waste treatment in the Nordic countries

Kristensen, N. (2004), "PVC Waste in Denmark – Costs and Benefits of Altenative Treatments", in Addressing the Economics of Waste, OECD Publishing, Paris, https://doi.org/10.1787/9789264106192-7-en.

Annex A

Environmental impacts – EN 15804+A1, CML/ISO 21930

Indicator	Unit	A1-A3	A4	A5	C1	C2	C3	C4	D
GWP	kg CO_2 eq.	8,85E+00	2,13E+00	2,47E-02	0,00E+00	1,15E-01	5,12E-01	5,29E-03	-4,70E+00
ODP	kg CFC-11 eq.	3,96E-06	3,40E-08	9,81E-12	0,00E+00	2,01E-09	9,46E-10	1,33E-11	-2,30E-06
AP	kg SO_2 eq.	2,79E-02	3,58E-03	5,33E-06	0,00E+00	1,99E-04	7,39E-04	3,53E-06	-1,28E-02
EP	kg PO_4 eq.	7,14E-02	9,05E-04	1,86E-06	0,00E+00	5,23E-05	2,51E-04	4,96E-06	-5,27E-03
POCP	kg C_2H_4 eq.	2,14E-03	3,79E-04	7,09E-07	0,00E+00	2,05E-05	1,33E-04	1,07E-06	-1,37E-03
ADP-M&M	kg Sb eq.	7,84E-05	6,98E-06	6,05E-09	0,00E+00	3,96E-07	1,69E-06	1,21E-09	-7,69E-05
ADP-fossil	MJ	1,63E+02	2,95E+01	1,11E-02	0,00E+00	1,61E+00	1,36E+00	1,44E-02	-1,24E+02

Environmental impacts – GWP-GHG

Indicator	Unit	A1-A3	A4	A5	C1	C2	C3	C4	D
GWP - GHG	kg CO_2 eq.	8,90E+00	2,15E+00	2,45E-02	0,00E+00	1,15E-01	4,72E-01	5,53E-03	-4,90E+00

***GWP- GHG**: Global Warming Potential, greenhouse gases*

Annex B

The declared environmental results presented in this EPD refer to Walkway Mat with a nominal thickness of 14 mm. As the manufacturing process, material composition, and production technology remain the same for all mats of different thicknesses, the environmental impacts are primarily driven by the quantity of material used per square metre of product.

For mats of other thicknesses, the environmental impacts can therefore be linearly extrapolated based on mass per unit area. This means that the results for different thicknesses of boards may be estimated by applying a proportional scaling factor relative to the 14 mm reference thickness, assuming identical raw materials, formulation, density, and production conditions. This approach is considered valid because no additional processing steps or changes in material composition occur with varying thickness; only the amount of material per square metre changes. Consequently, the life cycle impacts (GWP-fossil, GWP total) per square metre are directly proportional to the board thickness.

Thickness of the product	Weight per unit area [kg/m²]	GWP-fossil (A1-A3) [kg CO2eq./m²]	GWP-total (A1-A3) [kg CO2eq./m²]
4 mm	1,5	4,45	4,36
10 mm	2,2	6,52	6,39
14 mm (Declared)	3,0	8,89	8,71
16 mm	4,5	13,34	13,07

Revision

The revision includes upgrading the database to Ecoinvent 3.11 and adding a table with different product thicknesses, along with the GWP-total and GWP-fossil values.